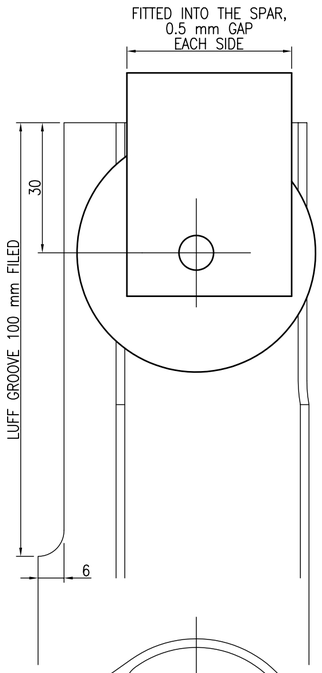

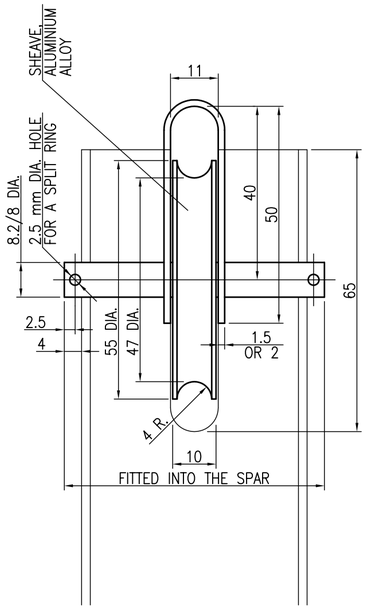

MASTHEAD CAGE
STAINLESS STEEL

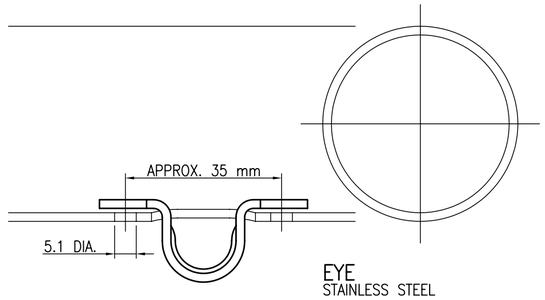

EYE
STAINLESS STEEL

FASTENED TO THE INNER SIDE OF THE SPAR
WITH 5 x 10 mm POP RIVETS

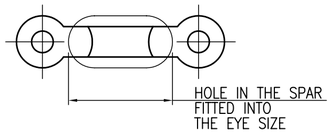

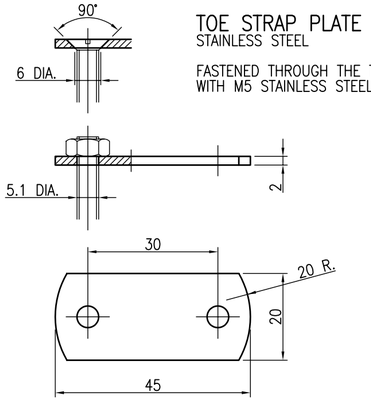

TOE STRAP PLATE
STAINLESS STEEL

FASTENED THROUGH THE TOE STRAP
WITH M5 STAINLESS STEEL BOLTS

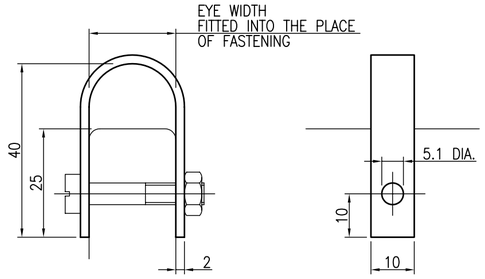

EDGE EYE
STAINLESS STEEL

FASTENED WITH AN M5 STAINLESS STEEL BOLT

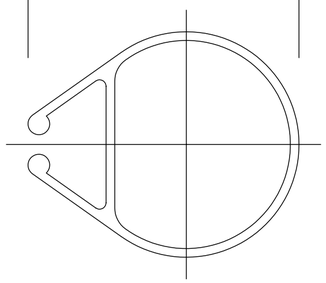

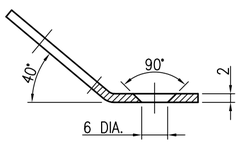

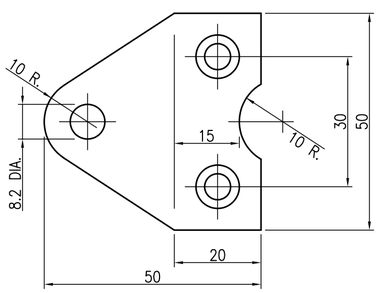

KICKING STRAP EYE PLATE
STAINLESS STEEL

FASTENED WITH M5 STAINLESS STEEL BOLTS

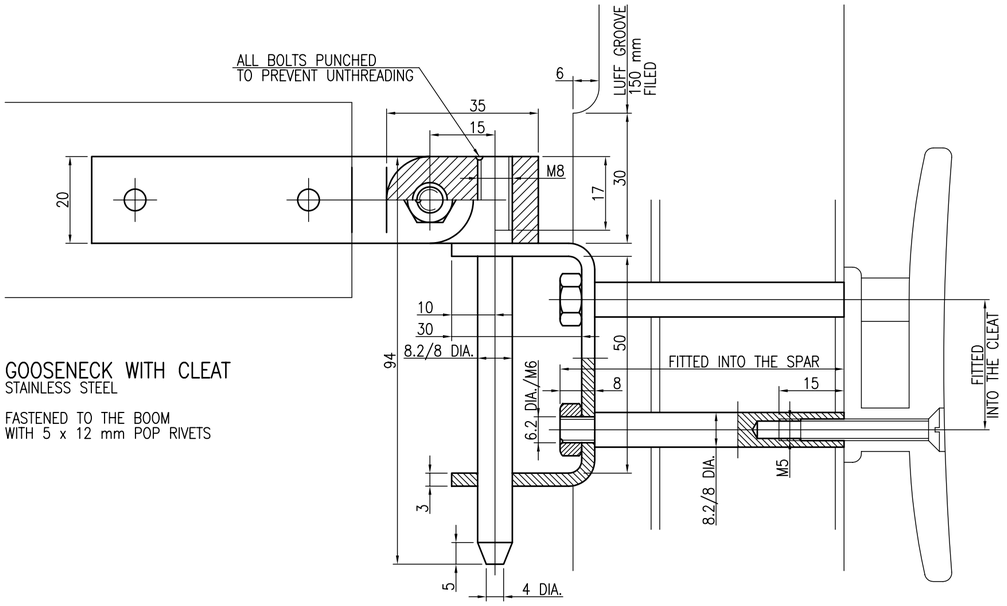

GOOSENECK WITH CLEAT
STAINLESS STEEL

FASTENED TO THE BOOM
WITH 5 x 12 mm POP RIVETS

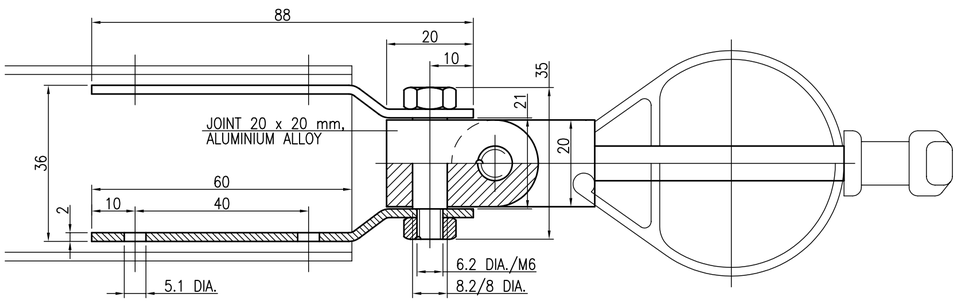

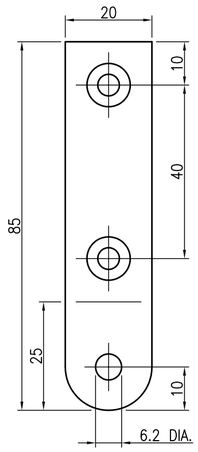

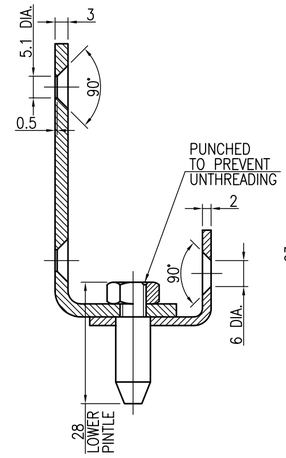

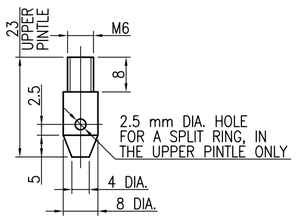

PINTLE AND GUDGEON
STAINLESS STEEL

PINTLES FASTENED TO THE RUDDER
WITH 5 x 50 mm STAINLESS STEEL
SCREWS

GUDGEONS FASTENED
TO THE TRANSOM WITH
M5 STAINLESS STEEL BOLTS

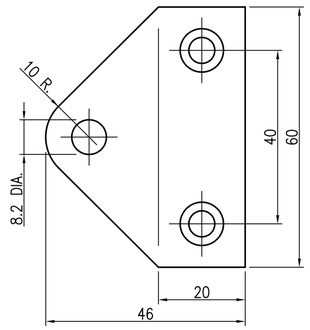

2.6m

SPAR AND HULL FITTINGS
SHEET 26.4/4, SIZE A2
SCALE 1:1

RADOSŁAW WERSZKO
JUNE 2005

(CC) THIS WORK IS LICENSED UNDER A CREATIVE COMMONS ATTRIBUTION–NONCOMMERCIAL–NODERIVS LICENSE